noise swash v 2.2-3 1997-8
dann green
green@soon.com
soundshimmer noise designs

Corrected 11/03/2001

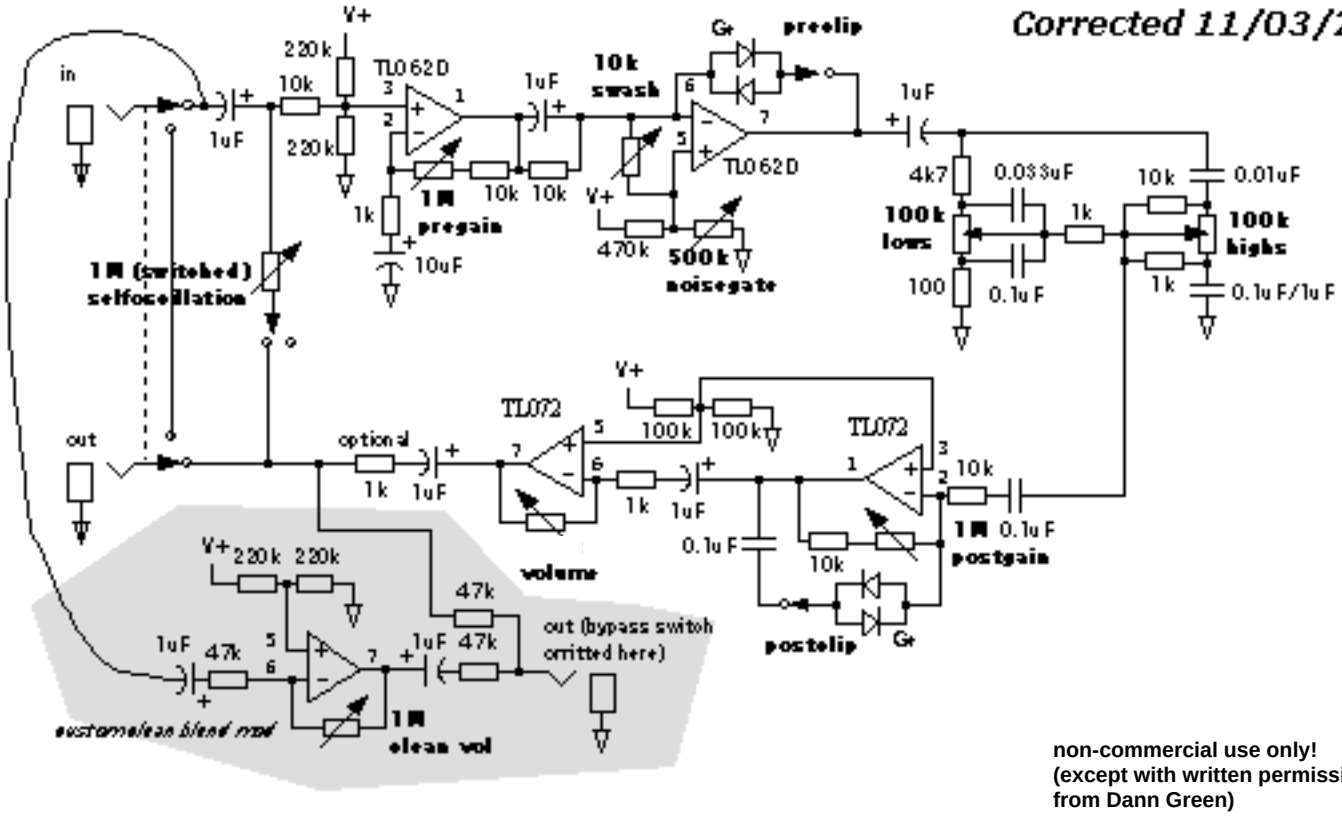

non-commercial use only!
(except with written permission
from Dann Green)