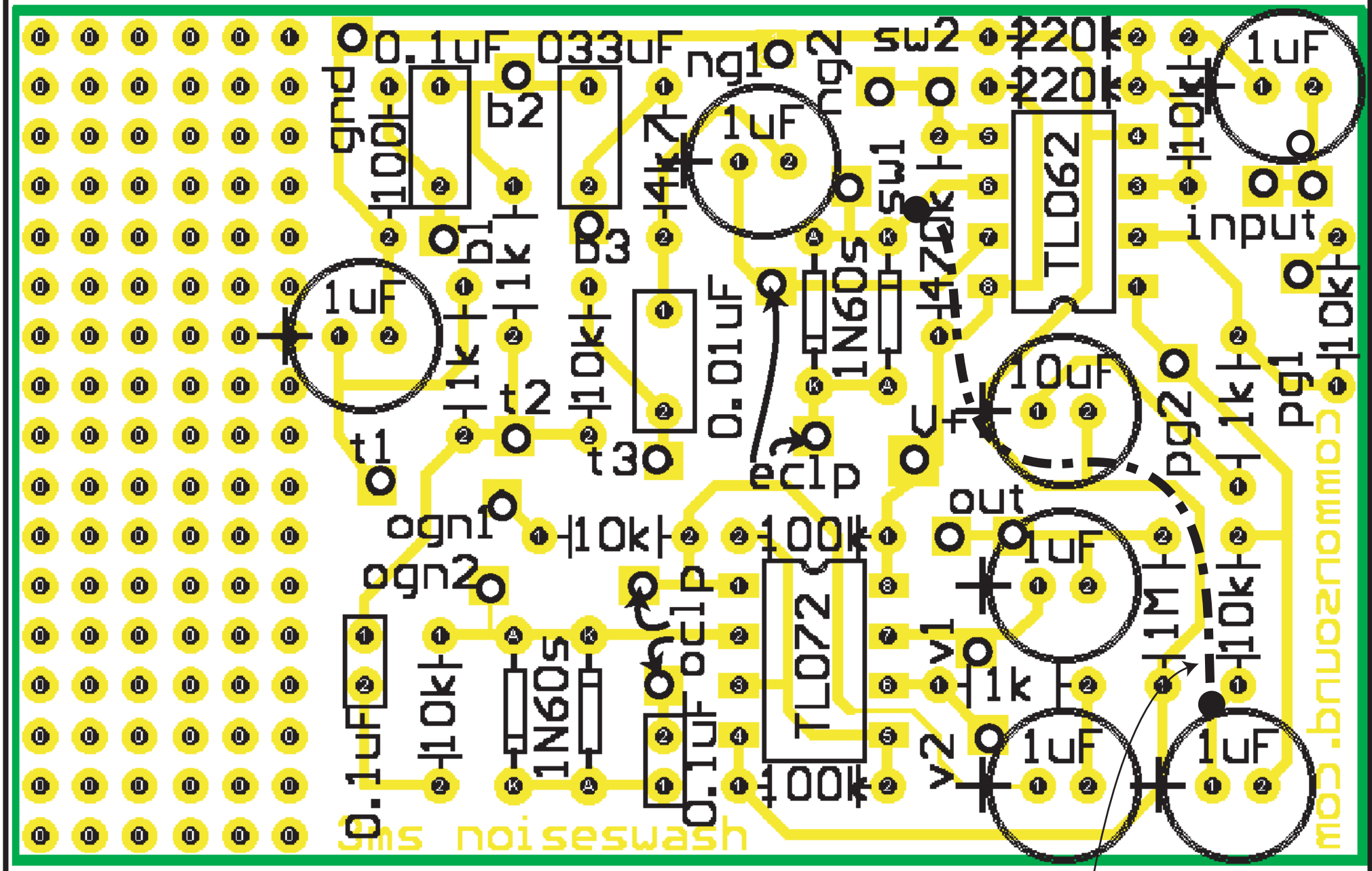

note: there's two wire hole by "input". One wire goes to "stomp 1". The other goes to "self-osc A"
There's two wire holes by "out". One wire goes to "stomp 6". The other goes to "self-osc 2"

pg1 & pg2 are pregain
ogn1 & ogn2 are postgain

oclp is postclip
eclp is preclip

DON'T FORGET THE JUMPER WIRE!!