Noise Swash "mini" v1.3.1
Wiring guide
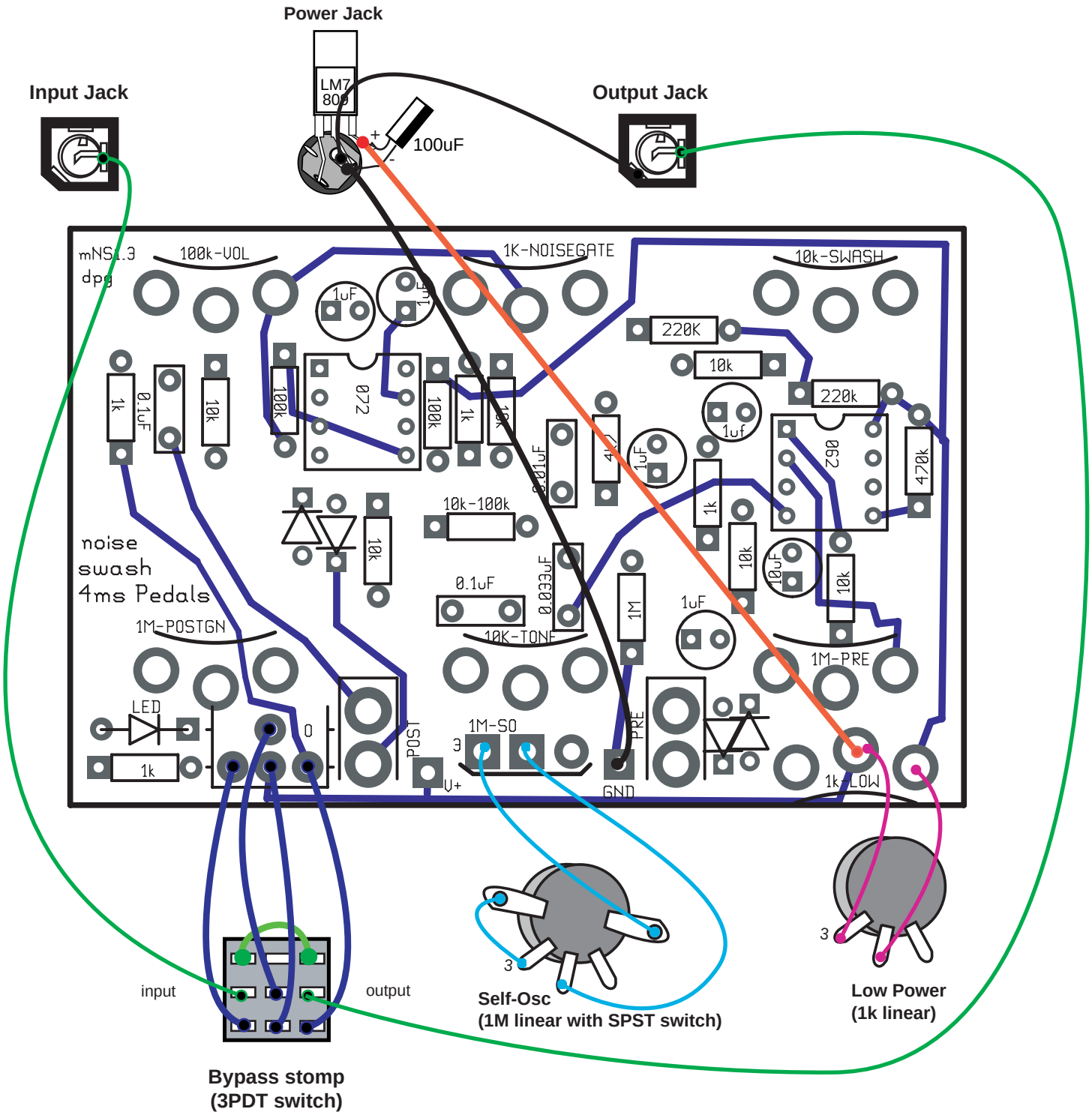
2008-09-03
commonsound.com
design by 4ms Pedals