Atoner PCB 1.7
Wiring guide

2009-04-02
commonsound.com
design by 4ms Pedals

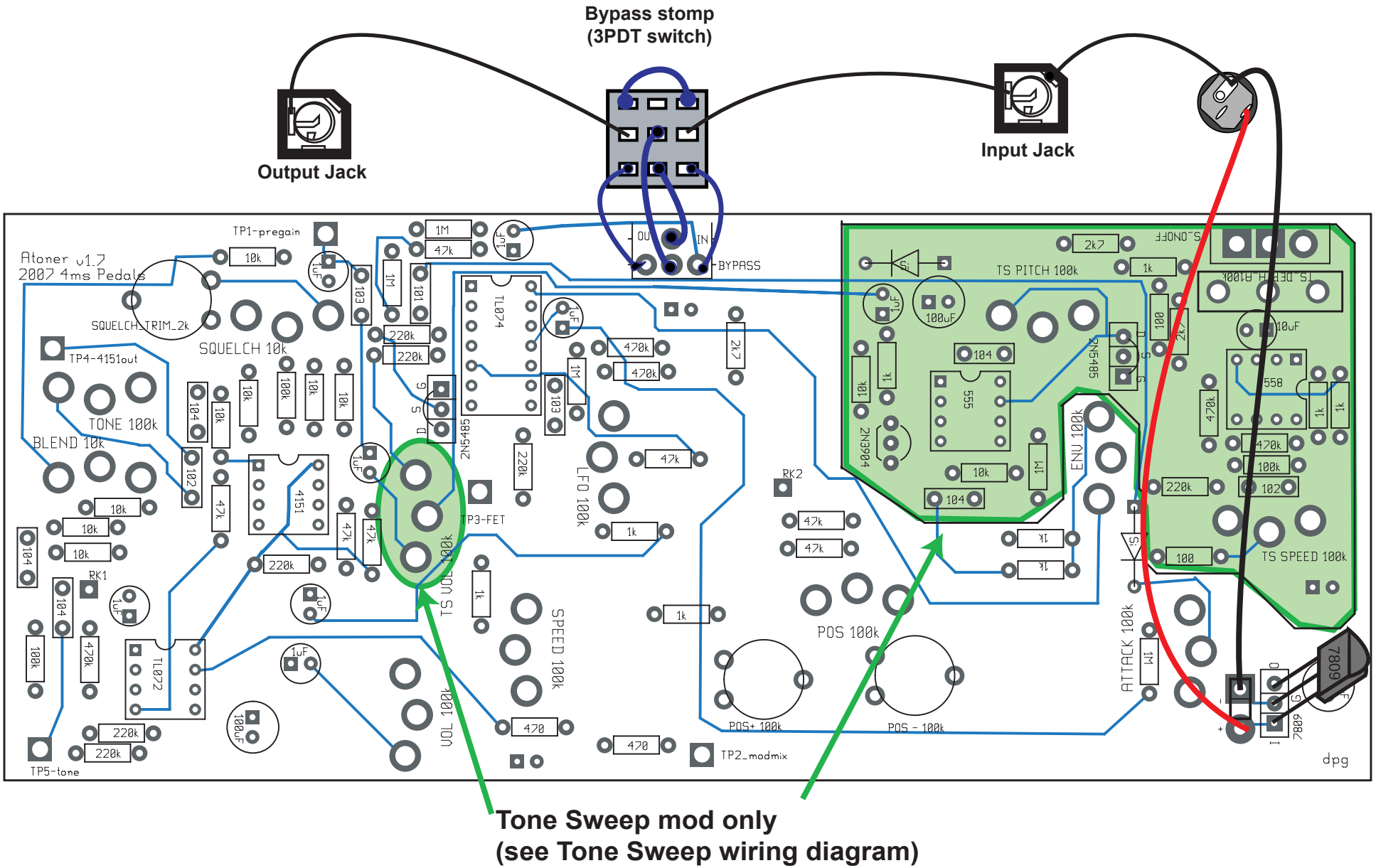

Tone Sweep mod only
(see Tone Sweep wiring diagram)