Tone Sweep Mod
Atoner PCB 1.7

Fill the entire board
(all components and PC-mounted pots)

Use 220k instead of 2k7 where shown
(between TS DEPTH and 2N5485)

Wire Bypass Stomp, Jacks, and Power
according to Atoner Wiring diagram

Wire Tone Sweep Depth pot as shown

2008-05-27
commonsound.com
design by 4ms Pedals
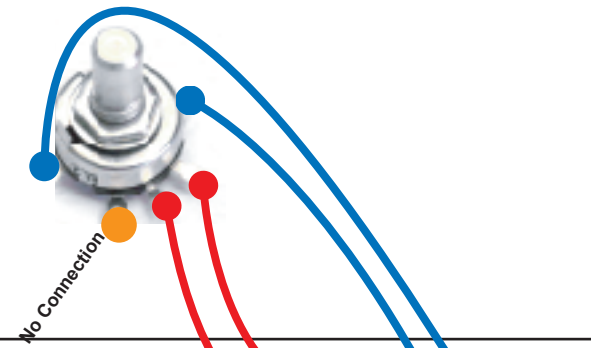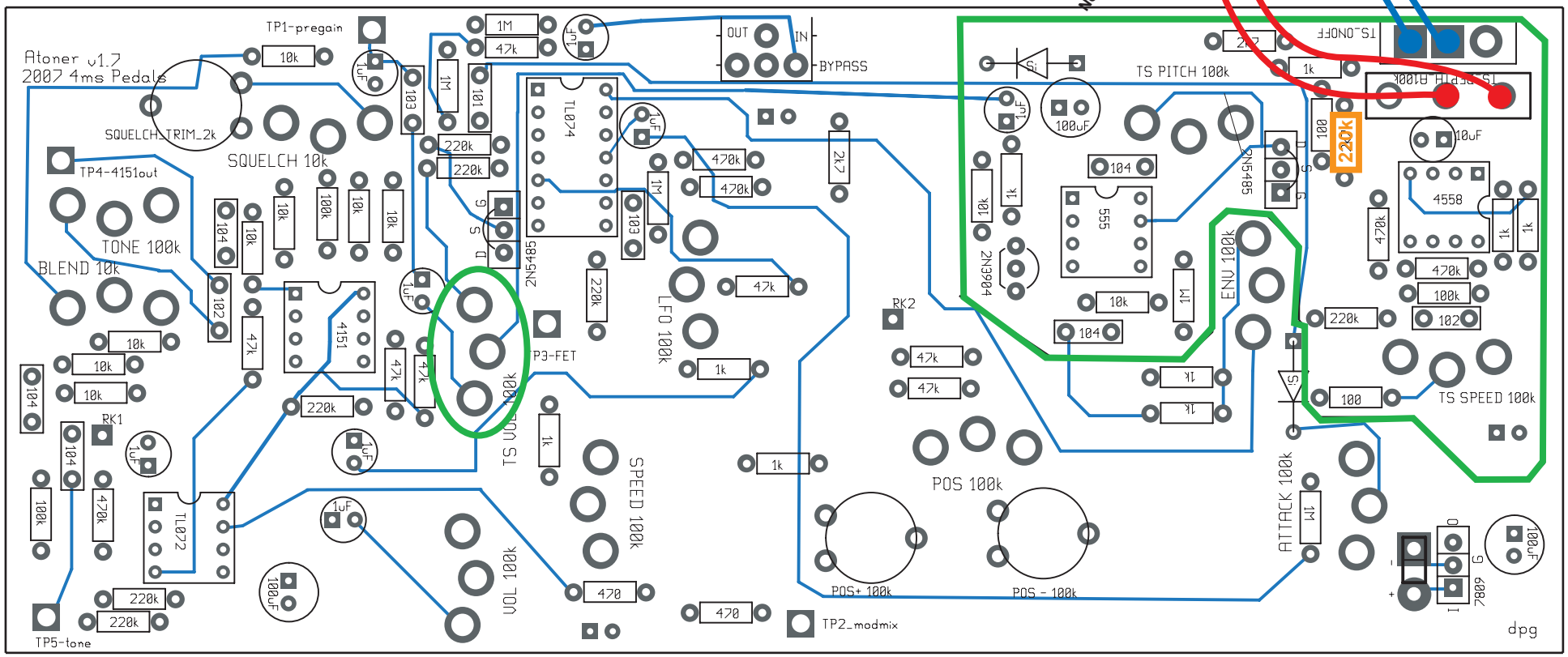
Tone Sweep Depth
(Audio 100k pot
with SPST switch)